PROPRIETARY DATA

PROPERTY OF ACE ROTO-MOLD MFG., INC. INFORMATION FURNISHED HEREIN IS THE PROPERTY OF ACE ROTO-MOLD MFG., INC AND SHALL NOT BE USED, DISCLOSED TO OTHERS, OR COPIED WITHOUT THE EXPRESSED WRITTEN CONSENT OF ACE ROTO-MOLD MFG., INC. ALL RIGHTS RESERVED.

VT2150-102

A

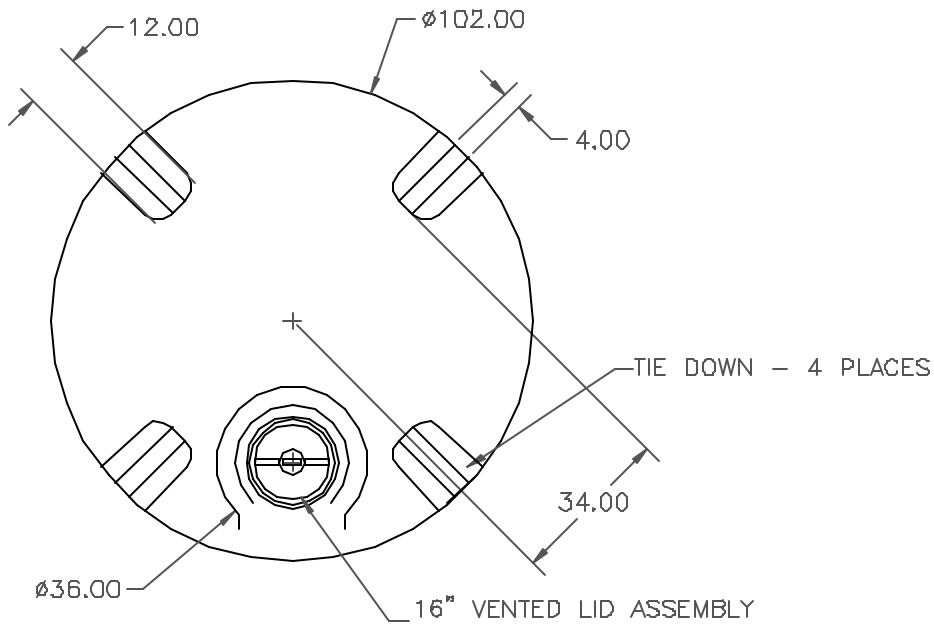

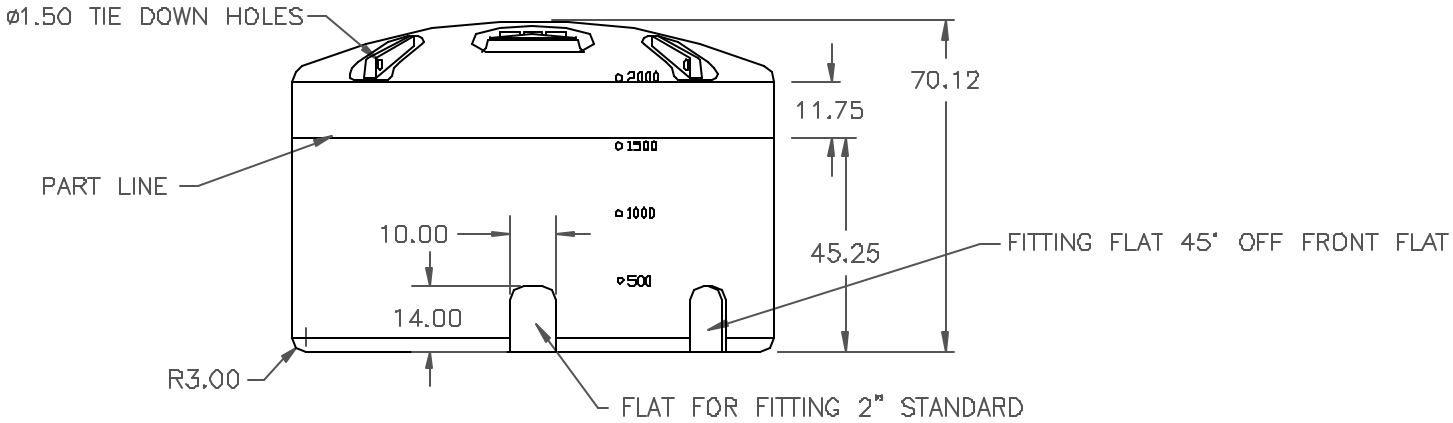

REV	DESCRIPTION	DATE APPRD
A	FINALIZE PART	9/8/05

DRAWN / DATE: DHJ 6/14/15

APPRD. / DATE:

MATERIAL: HDPE OR EQUIVALENT REFERENCE MATERIAL DATA SHEET FOR SPECIFIC PROPERTIES.

ALL DIMENSIONS ARE IN DECIMAL INCHES
TOLERANCES UNLESS OTHERWISE SPECIFIED
± 1% @ 68° F

THIRD ANGLE PROJECTION
ANSI 14.5M

NOTES:
1. NOM. WALL @ .315
2. SHOT WEIGHT 415 LBS.
3. WHITE OR YELLOW COLOR

ACE ROTO-MOLD
A DIVISION OF DEN HARTOG INDUSTRIES, INC.
4118 HWY. 61 BLVD., BOX 421, HOSPERS, IOWA 51238

CLIENT / DESCRIPTION: 2151 GALLON VERTICAL TANK

SCALE: N.S.

PART NO.: VT2150-102